COMPUTER ARCHITECTURE- IT0205

M.Thenmozhi/Kayalvizhi Jayavel/M.B.Panbu
Asst.Prof.(Sr.G)/Asst.Prof.(Sr.G)/Asst.Prof.(O.G)
Department of IT
SRM University, Kattankulathur

Disclaimer

The contents of the slides are solely for the purpose of teaching students at SRM University. All copyrights and Trademarks of organizations/persons apply even if not specified explicitly.

UNIT-IV : memory organization

- Memory Hierarchy
  - Main memory
  - Auxiliary memory
  - Associative memory
  - Cache memory
  - Virtual memory

- Memory Management Hardware

Memory hierarchy

- Main Memory – memory unit that communicates directly with the CPU
- Auxiliary memory – devices that provide backup storage (e.g) magnetic disks and tapes
- Cache memory – high speed memory used to increase the speed of processing by making programs and data available to the CPU at a rapid rate

MAIN memory

- Static Random Access Memory – internal flip flops that store the binary information
- Dynamic RAM – stores the binary information in the form of electric charges that are applied to capacitors
- Read Only Memory – store programs that are permanently resident in the computer and for tables of constants that do not change in value once the production of the computer is completed
- Boot strap loader – function is start the computer software operating when power is turned on

Main memory

- Boot strap program loads a portion of operating system from disc to main memory and control is then transferred to operating system
- RAM chip – utilizes bidirectional data bus with three state buffers to perform communication with CPU
- Memory address map – pictorial representation of assigned address space for each chip in the system

block diagram and function table of ram

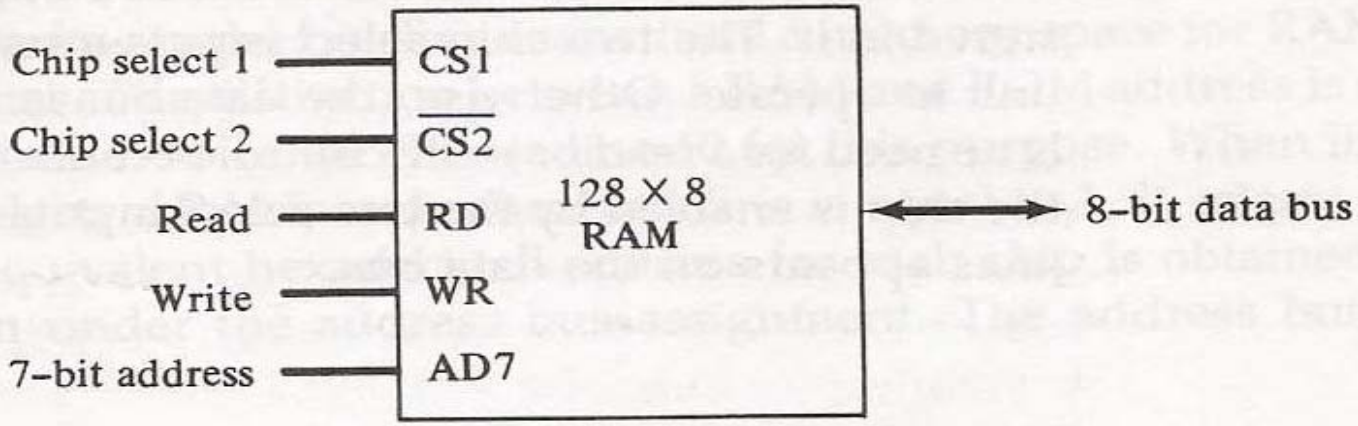

(a) Block diagram

CS1	$\overline{CS2}$	RD	WR	Memory function	State of data bus
0	0	×	×	Inhibit	High-impedance
0	1	×	×	Inhibit	High-impedance
1	0	0	0	Inhibit	High-impedance
1	0	0	1	Write	Input data to RAM
1	0	1	×	Read	Output data from RAM
1	1	×	×	Inhibit	High-impedance

(b) Function table

Auxiliary memory

- Access time – average time required to reach a storage location in memory and obtain its content
- Seek time – time required to position the read/write head to a location
- Transfer time – time required to transfer data to or from the device
- Transfer rate – no. of characters or words that the device can transfer per second

Associative memory

- Associative memory can also be called as Content addressable memory (CAM)
- CAM is accessed simultaneously and in parallel on the basis of data content rather than by specific address or location
- Associative memory is more expensive than a RAM because each cell must have storage capability as well as logic circuits
- Argument register – holds an external argument for content matching
- Key register – mask for choosing a particular field or key in the argument word

Block diagram of associative memory

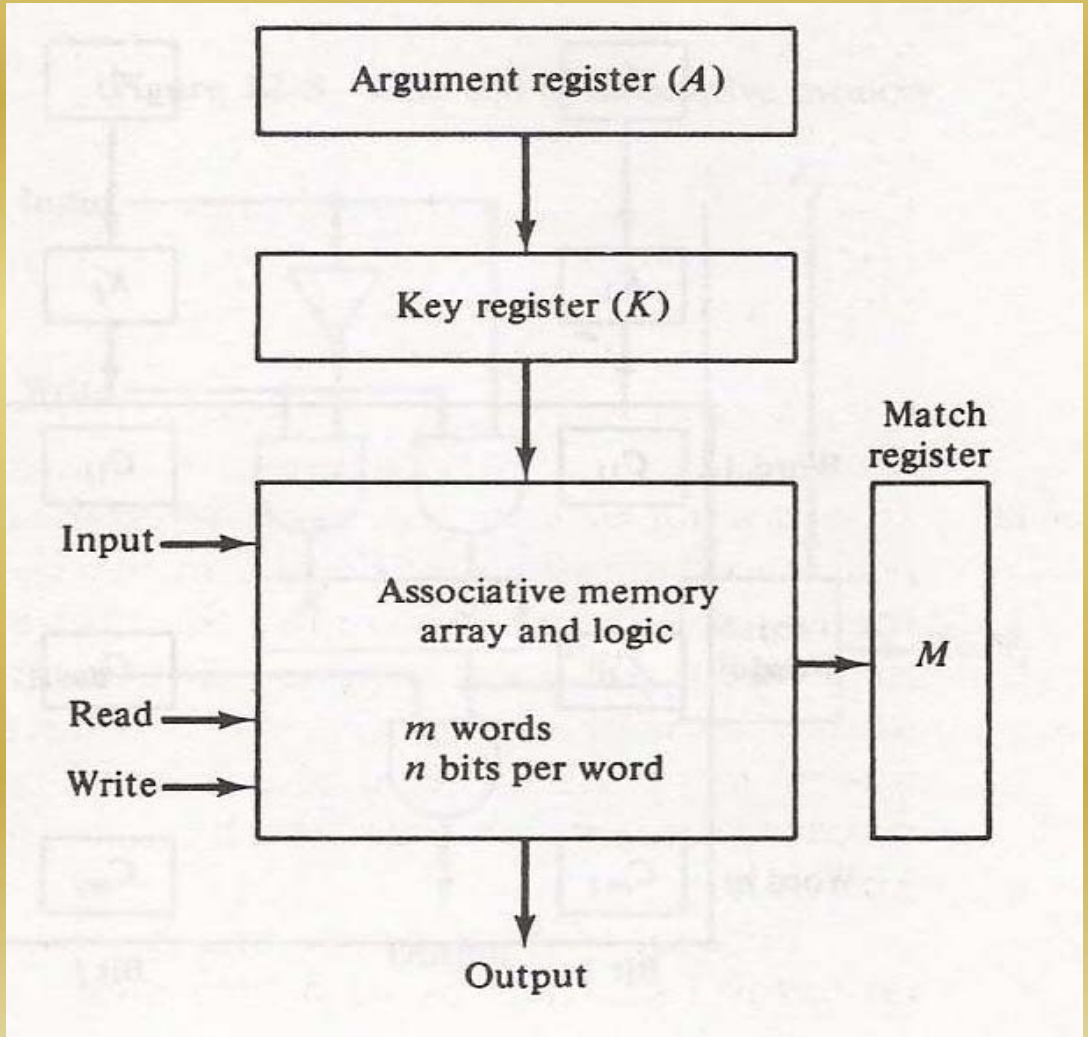

One cell of associative memory

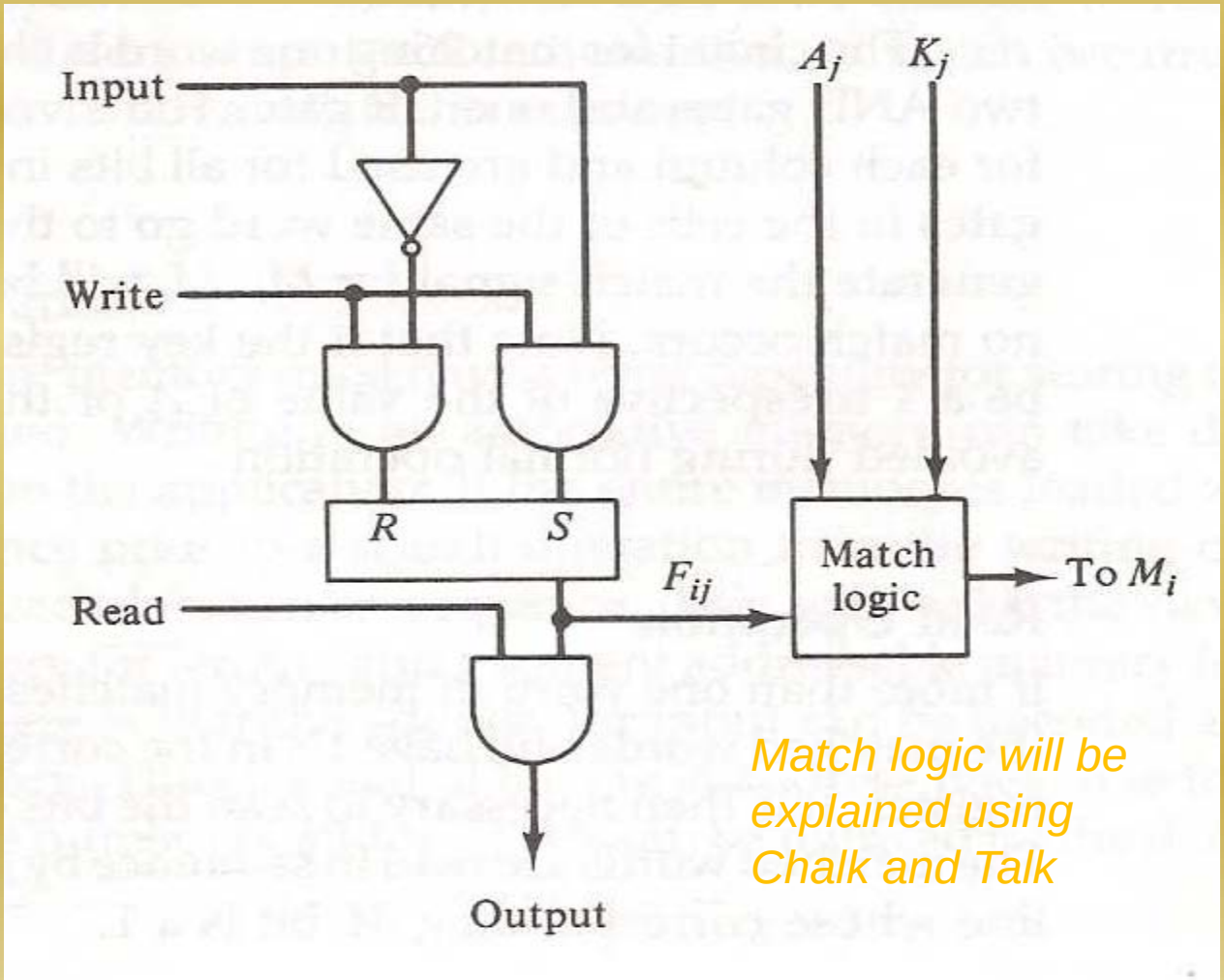

Match logic will be explained using Chalk and Talk

Cache memory

- Locality of reference – references to memory at any given interval tend to be confined within a few localized areas of memory
- Cache memory – logically placed between CPU and main memory
- Hit ratio – ratio of the number of hits (success in finding the words in Cache) to the total CPU references to memory (hits+misses)
- Mapping – transformation of data from main memory to cache memory

Cache memory

- Three types of mapping procedures
  - Associative mapping – stores both address and content of the memory word; In the matching process, if the address is found, the corresponding 12-bit data is read and sent to the CPU
  - Direct mapping – consists of index field and tag field; no. of bits in the index field is equal to the number of address bits required to access the cache memory; each word in the cache consists of data word and its associated tag; hit:tag field of CPU address = tag field in the cache

Cache memory

- Three types of mapping procedures
  - Set Associative mapping – each word of cache can store two or more words of memory under the same index address; when a miss occurs in set associative mapping, tag replacement algorithm should be applied

ASSOCIATIVE MAPPING CACHE

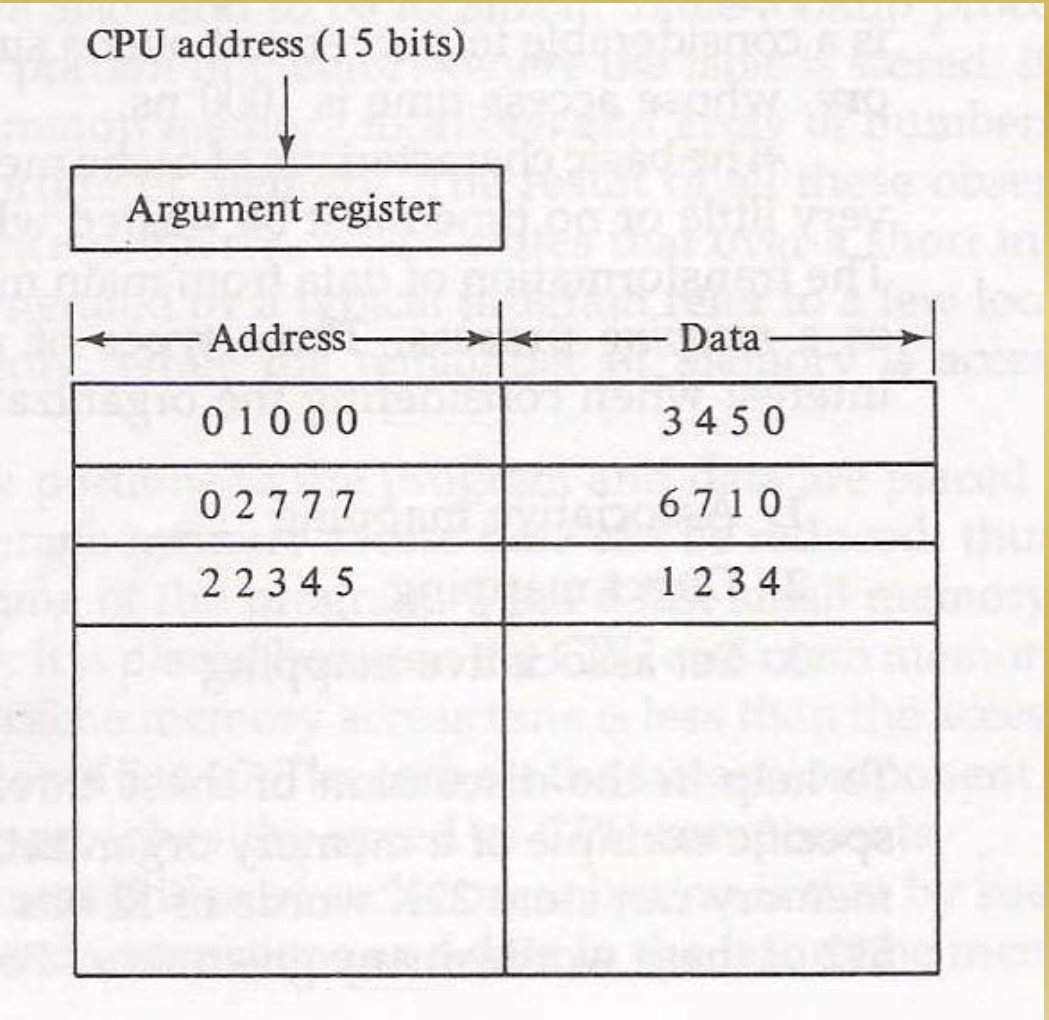

Virtual memory

- Virtual memory – permit the user to construct programs as though large memory space were available, equal to the totality of the auxiliary memory
- An address used by a programmer is Virtual address
- Set of virtual addresses are called address space
- An address in main memory is called a location or physical address
- Set of physical addresses constitute memory space

Virtual memory

- Address space > memory space if virtual memory is available.
- Mapping a virtual address
  - Virtual address register – stores virtual address
  - Memory mapping table – to map a virtual address to a physical address
  - Main memory address register – stores physical address
  - Address mapping can also be done using pages

Memory table for mapping a virtual address

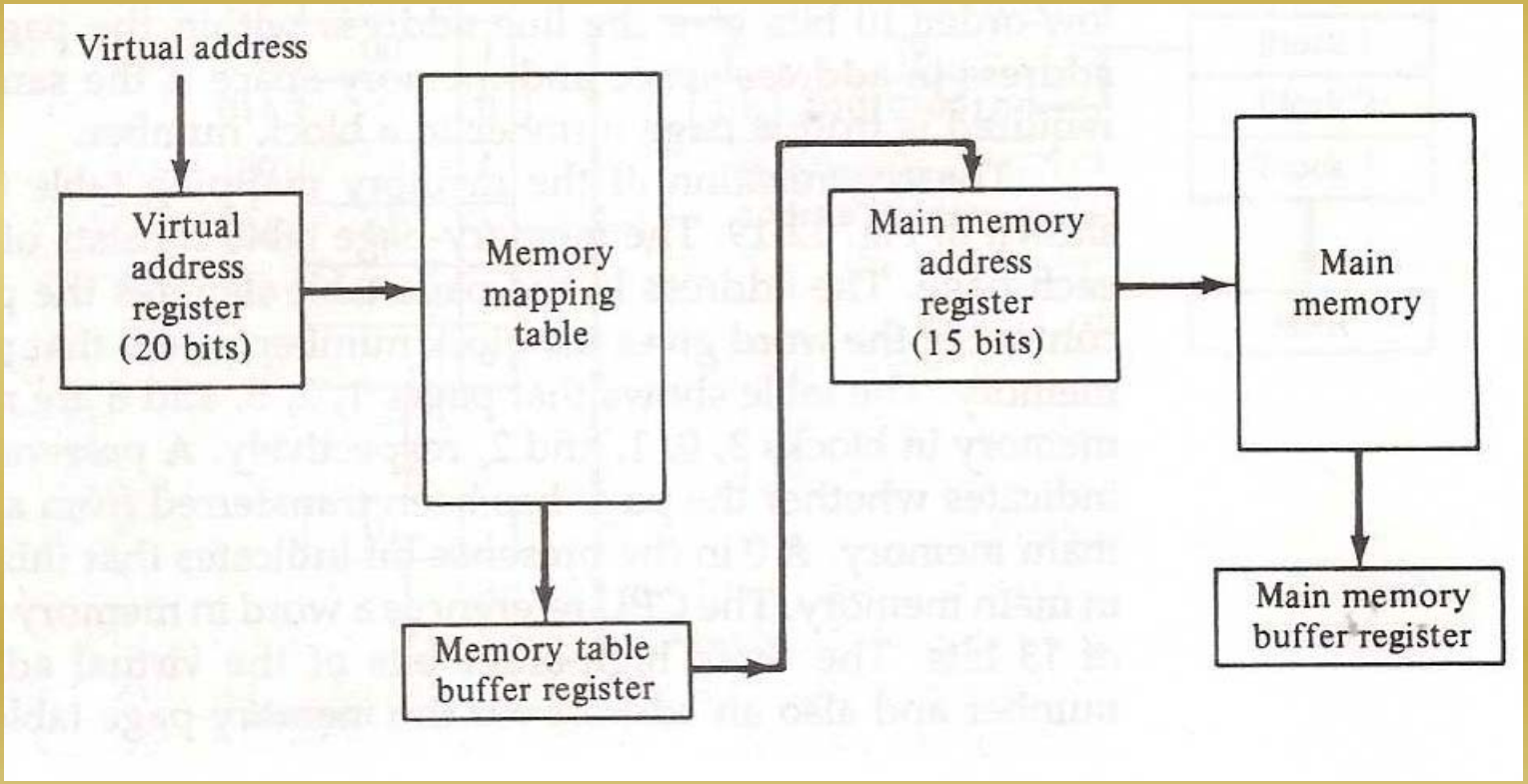

Address mapping using pages

- Blocks – physical memory is broken down into groups of equal size
- Page – groups of address space of the same size
- Page frame is sometimes used to denote a block
- Memory page table consists of 8 words one for each page
- Address in the page table denotes the page number
- Content of the word gives the block number where that page is stored in main memory
- Presence bit – indicates whether the page has been transferred from auxiliary memory into main memory
- 3 high order bits of the virtual address specify a page number and an address for the memory page table.

Memory management hardware

- Basic components include:
  - Facility for dynamic storage relocation that maps logical memory references into physical memory addresses
  - Provision for storing common programs stored in memory by different users
  - Security against unauthorized access between users and preventing users from changing OS functions
- Segment – set of logically related instructions or data elements associated with a given name (address generated by a segmented program is logical address)
- Translation lookaside buffer (TLB) – fast associative memory used to hold the most recently referenced table entries

Example of logical and physical addresses

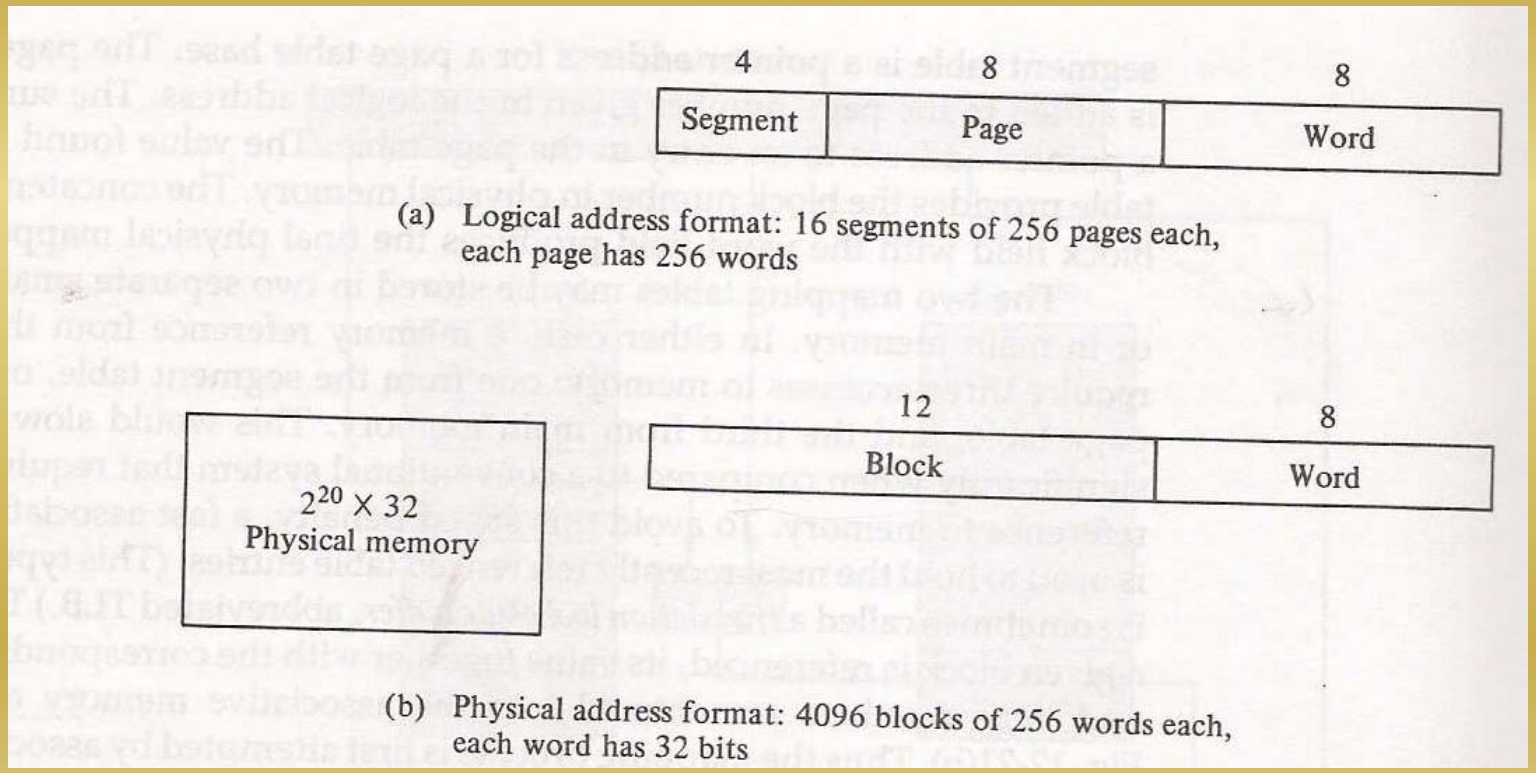

REVIEW QUESTIONS & TOPICS

- Need for cache
- Static and dynamic RAM –Comparison
- Memory address mapping
- Content addressable memory – function
- Locality of reference
- Mapping procedures in cache memory
- Address space and memory space
- Need for memory management hardware
- Components of memory management hardware unit